ELECTRICAL

THE CONTRACTOR SHALL FURNISH AND INSTALL A COMPLETELY SELF-CONTAINED DUPLEX MOTOR CONTROL PANEL. THE CONTROL PANEL SHALL PROVIDE SHORT CIRCUIT AND OVERLOAD PROTECTION FOR THE PUMPS. AN ALTERNATOR SHALL BE PROVIDED TO ALTERNATE THE LOAD PUMP DUTY BETWEEN THE TWO PUMPS ON SUCCESSIVE CYCLES.

THE DUPLEX MOTOR CONTROLS SHALL BE HOUSED IN A NEMA 3R ENCLOSURE. THE ENCLOSURE SHALL BE FORMED OF G-90 GALVANIZED STEEL WITH ALL SURFACES PHOSPHATIZED, THEN FINISHED INSIDE AND OUT WITH ANSI 61 GRAY POLYESTER POWDER FINISH. A FULL WIDTH DRIP SHIELD IS TO BE FORMED INTO THE TOP CAP TO PREVENT STANDING WATER FROM DRIPPING INTO THE INTERIOR WHEN THE DOOR IS OPENED. THIS DRIP SHIELD AND THE FORMED EDGES OF THE ENCLOSURE SHALL PROVIDE A SEATING SURFACE FOR THE FULL DOOR GASKET. THE DOOR IS TO BE EQUIPPED WITH TWO GALVANIZED HINGES WITH STAINLESS STEEL HINGE PINS. TWO PADLOCKABLE DRAW-PULL LATCHES SHALL BE PROVIDED TO HOLD THE DOOOR CLOSED. WELD NUTS SHALL SUPPORT THE REMOVABLE STEEL COMPONENT MOUNTING PANEL. THE REMOVABLE PANEL IS TO BE WHITE ENAMEL AND WILL BE DRILLED AND TAPPED FOR COMPONENT MOUNTING. THE ENCLOSURE SHALL HAVE EXTERNAL MOUNTING TABS FOR POLE MOUNTING. THE ENCLOSURE MUST BE RATED NEMA 3R RAINTIGHT AND SHALL BE SUITED FOR OUTDOOR MOUNTING.

A THERMAL MAGNETIC CIRUIT BREAKER SHALL BE PROVIDED TO PROTECT THE MOTOR FROM SHORT CIRCUITS AND TO SERVE AS A MOTOR BRANCH CIRCUIT DISCONNECT AS REQUIRED BY THE NATIONAL ELECTRICAL CODE (NEC).

A MAGNETIC STARTER SHALL BE PROVIDED FOR THE PUMP MOTOR. THE STARTER SHALL BE EQUIPPED WITH A THREE (3) POLE BIMETALLIC OVERLOAD RELAY WITH AMBIENT COMPENSATION AND CLASS 10 QUICK TRIP HEATERS. HEATERS MUST BE PROPERLY SIZED FOR MOTOR LOAD. THE OVERLOAD RELAY SHALL PROVIDE THE TERMINALS FOR CONNECTION OF THE PUMP MOTOR CABLE.

A CONTROL TRANSFORMER SHALL BE PROVIDED TO SUPPLY 115 VOLTS FOR THE CONTROL CIRCUIT AND AN AUXILARY OUTLET AT THE CONTROL PANEL. THE TRANSFORMER SHALL BE A CONTINUOUS DUTY, MACHINE TOOL TYPE, SIZED TO MEET THE LOAD REQUIREMENTS OF THE CONTROL CIRCUIT. THE TRANSFORMER PRIMARY SHALL BE CONNECTED TO THE LOAD SIDE OF THE CIRCUIT BREAKER. ONE SIDE OF THE SECONDARY WINDING SHALL BE SIZED TO PROTECT THE TRANSFORMER IN ACCORDANCE WITH REQUIREMENT OF THE NEC.

A TWO (2) POLE, 600 VAC, 30 AMPERE RATED FUSE BLOCK SHALL BE PROVIDED FOR TRANSFORMER PRIMARY WINDING: A ONE (1) POLE, 250 VAC, 30 AMPERE FUSE BLOCK WILL BE PROVIDED FOR THE SECONDARY WINDING. FUSES SHALL BE SIZED TO PROTECT THE TRANSFORMER IN ACCORDANCE WITH REQUIREMENTS OF THE NEC.

AN AUTOMATIC ALTERNATOR SHALL BE PROVIDED WHICH WILL ALTERNATE THE LEAD AND LAG PUMPS AT THE SHUT-OFF OF EACH PUMPING CYCLE. THE ALTERNATOR CIRCUITRY SHALL START THE LAG PUMP IN THE EVENT THAT THE LEAD PUMP CAPACITY IS LESS THAN THE INFLOW OR THE LEAD PUMP FAILS.

A TERMINAL BLOCK SHALL BE PROVIDED FOR CONNECTION OF LEVEL CONTROLS AND OTHER CONTROL WIRING AS REQUIRED FOR PROPER PUMP INSTALLATION. THE CONTROL SHALL BE EQUIPPED WITH A HAND-OFF-AUTO SELECTOR SWITCH AND AN AMBER RUN LIGHT, MOUNTED ON AN ALUMINUM PLATER UNDER COVER OF THE ENCLOSURE DOOR. THE SELECTOR SWITCH SHALL BE A TOGGLE TYPE WITH SCREW TERMINALS RATED 250 VAC, THREE (3) AMPERES. THE RUN LIGHT SHALL BE 1/3 WATT 115-VOLT NEON TYPE.

THE CONTROL PANEL SHALL BE EQUIPED WITH AN DORSETT SCADA SYSTEM TO PROVIDE CONTACT WITH CITY PERSONNEL ON ALL ALARM POINTS.

THE CONTROL SHALL BE WIRED IN ACCORDANCE WHITH ALL APPLICABLE REQUIREMENTS OF THE NATIONAL ELECTRICAL CODE. ALL WIRING SHALL BE PERFORMED IN A NEAT AND ORDERLY MANNER.

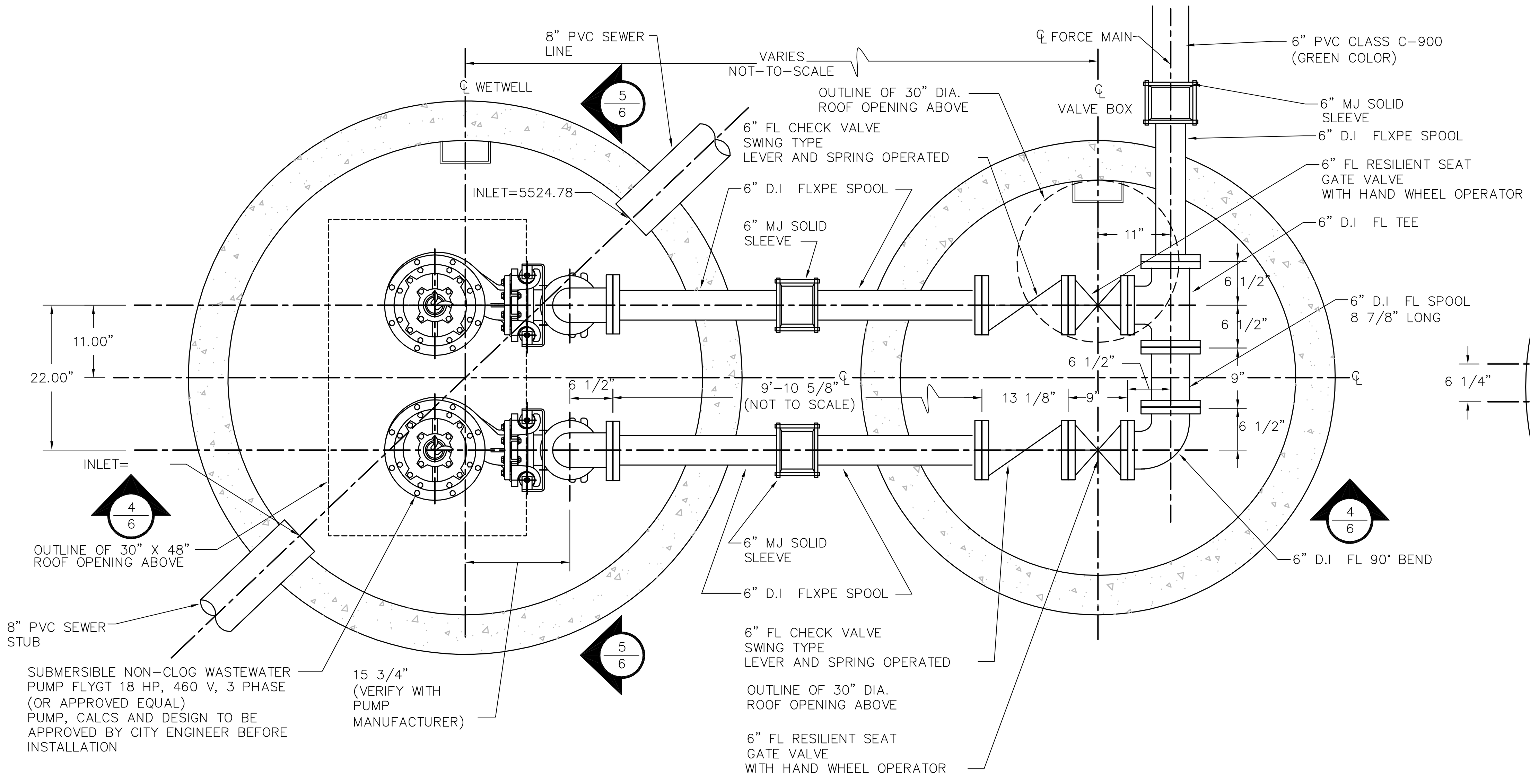

1/6 SECTION

SCALE: 3/4" = 1'-0"

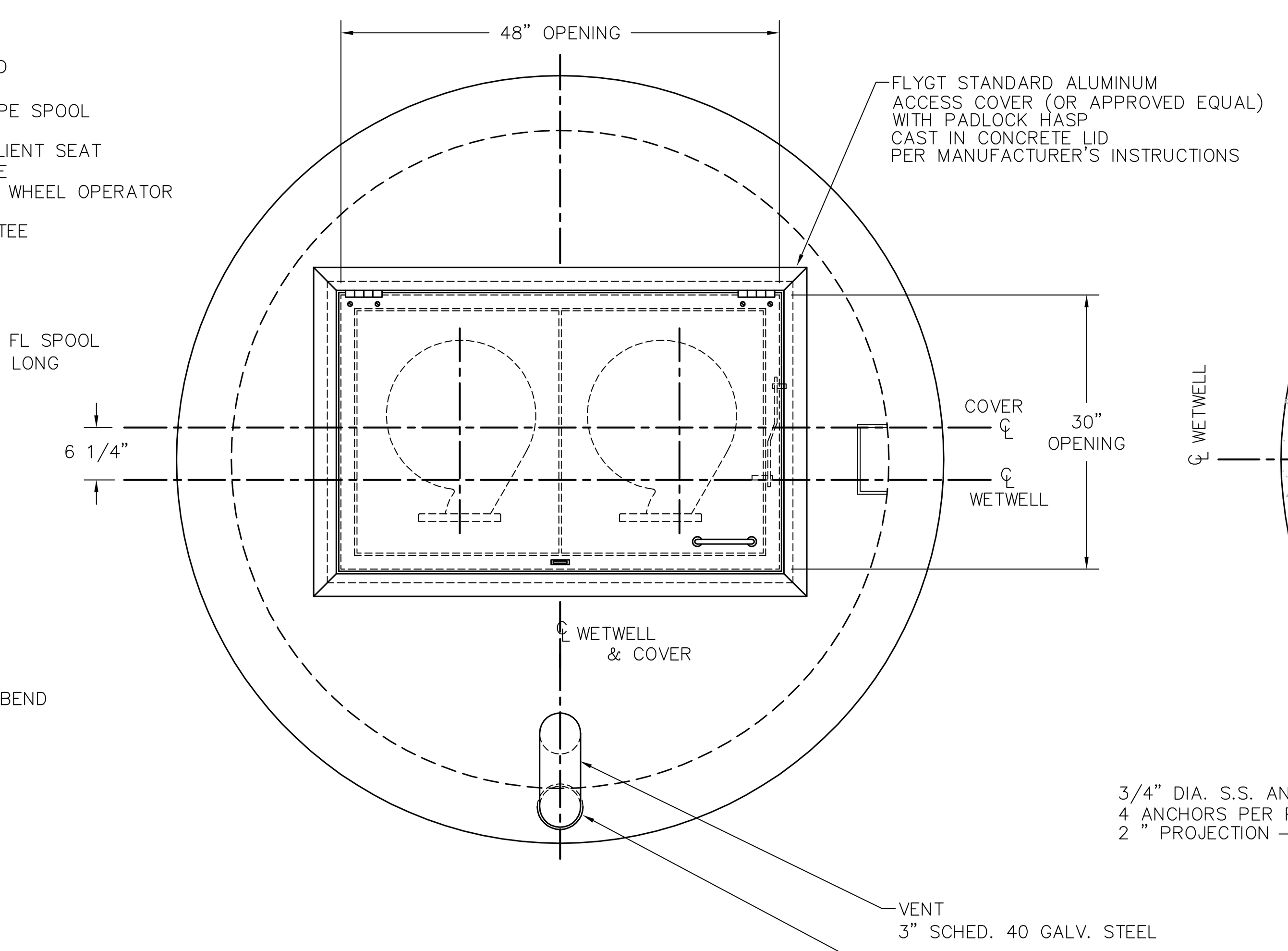

2/6 SECTION

ACCESS COVER PLAN

SCALE: 3/4" = 1'-0"

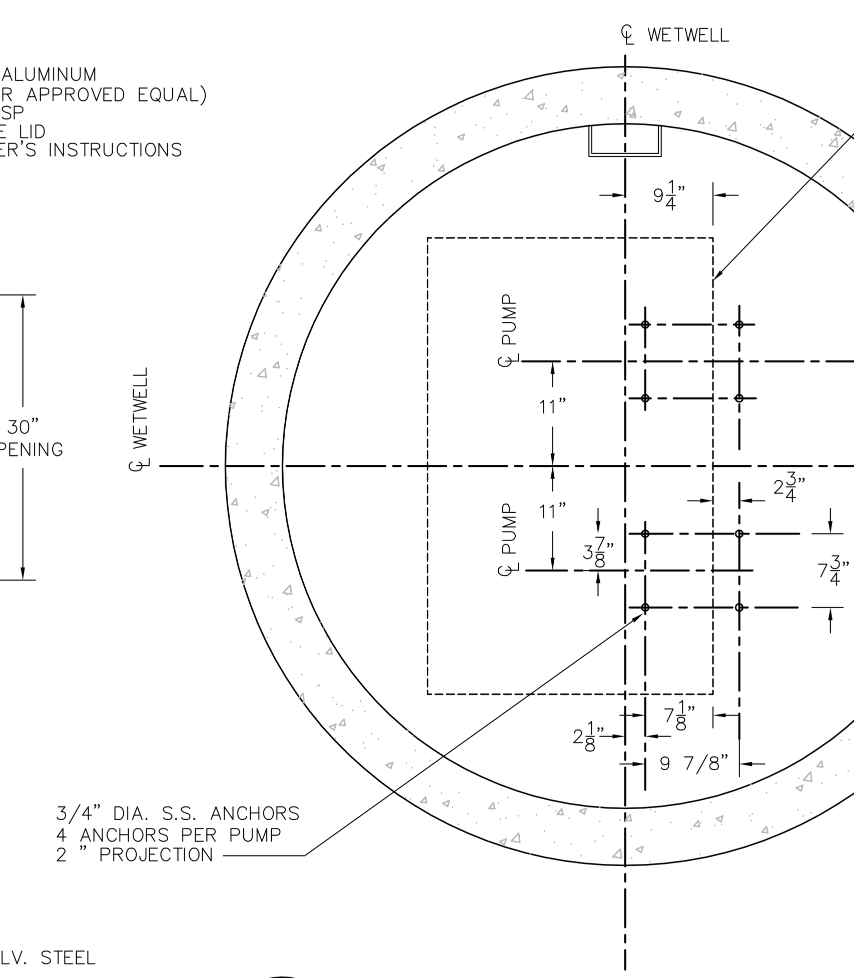

3/6 ANCHOR BOLT LAYOUT

SCALE: 3/4" = 1'-0"

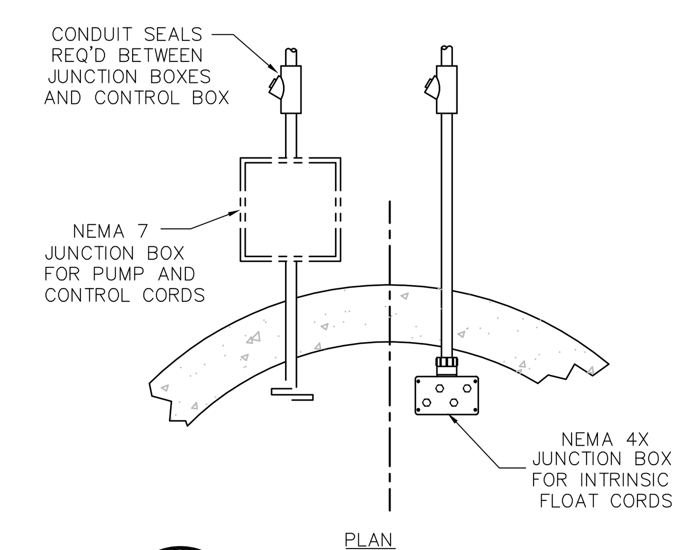

6/6 DETAIL

JUNCTION BOX MOUNTING NOT-TO-SCALE

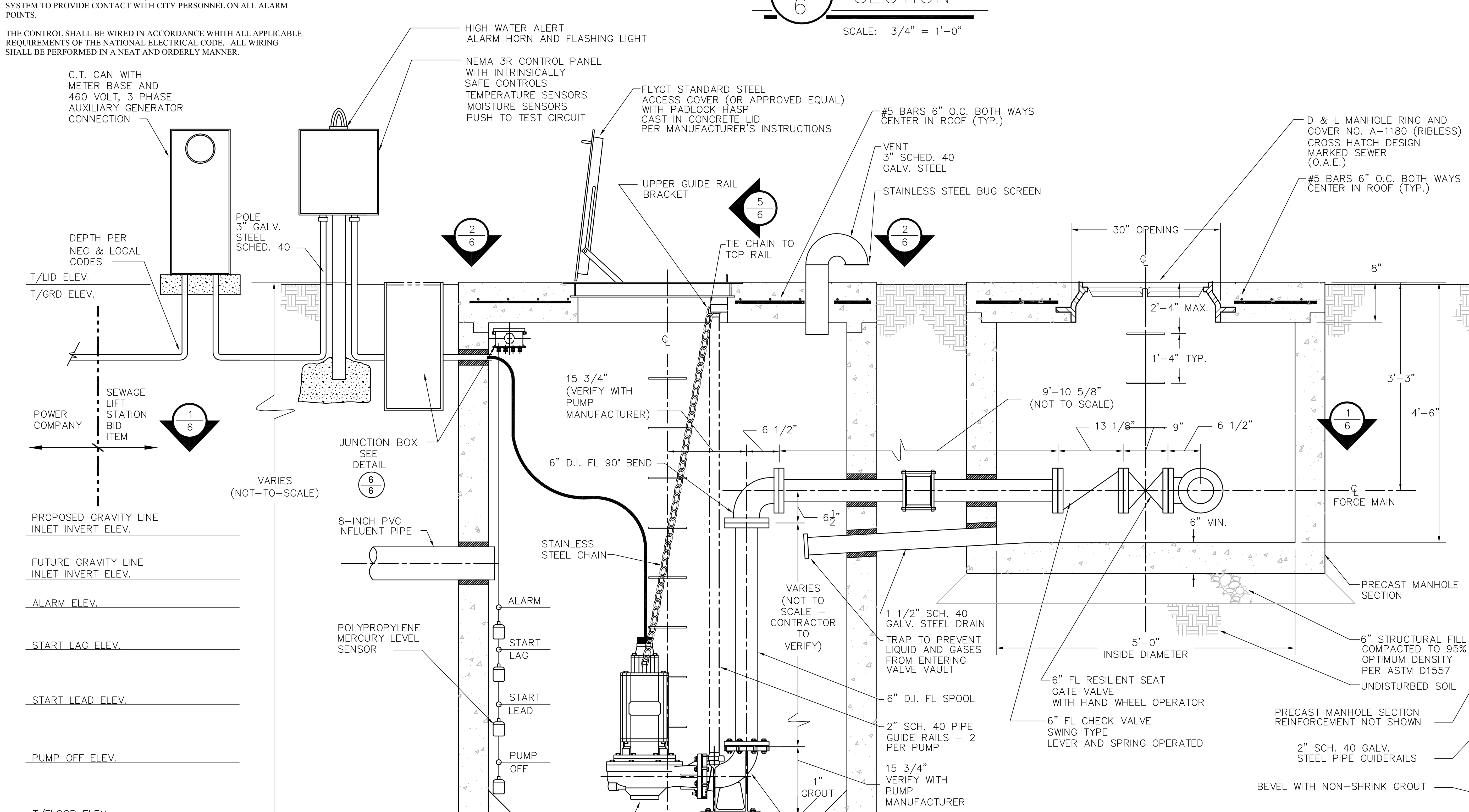

NOTES:

1. FLOATS MUST BE INSTALLED OUT OF THE INFLUENT FLOW TO AVOID TURBULENCE.
2. ELECTRICAL CONDUIT & FITTINGS ACCORDING TO STATE AND LOCAL CODES.
3. PIPING IN WET WELL AND VALVE PIT IS TO BE CLASS 50 DUCTILE IRON.
4. CONTRACTOR SHALL VERIFY ROOF ACCESS OPENING AND PUMP ANCHOR BOLT DETAILS AND PLACEMENT WITH PUMP MANUFACTURER PRIOR TO CONSTRUCTION.
5. CONTRACTOR SHALL VERIFY VALVE AND DUCTILE IRON PIPE SPOOL DIMENSIONS PRIOR TO CONSTRUCTION.
6. CONTRACTOR SHALL PROVIDE SUBMITTALS FOR DUCTILE IRON PIPE, FITTINGS AND VALVES.
7. CONTRACTOR TO PROVIDE FOR INSTALLATION OF PHONE LINE TO CONTROL PANEL FOR AUTO DIALER.
8. ALL BACKFILL AROUND LIFT STATION & VALVE VAULT TO BE COMPACTED TO 95% OF MAX. DENSITY.

4/6 SECTION

SCALE: 3/4" = 1'-0"

NOTE:
ALL DIMENSIONS TO BE VERIFIED BY CONTRACTOR BEFORE INSTALLATION.

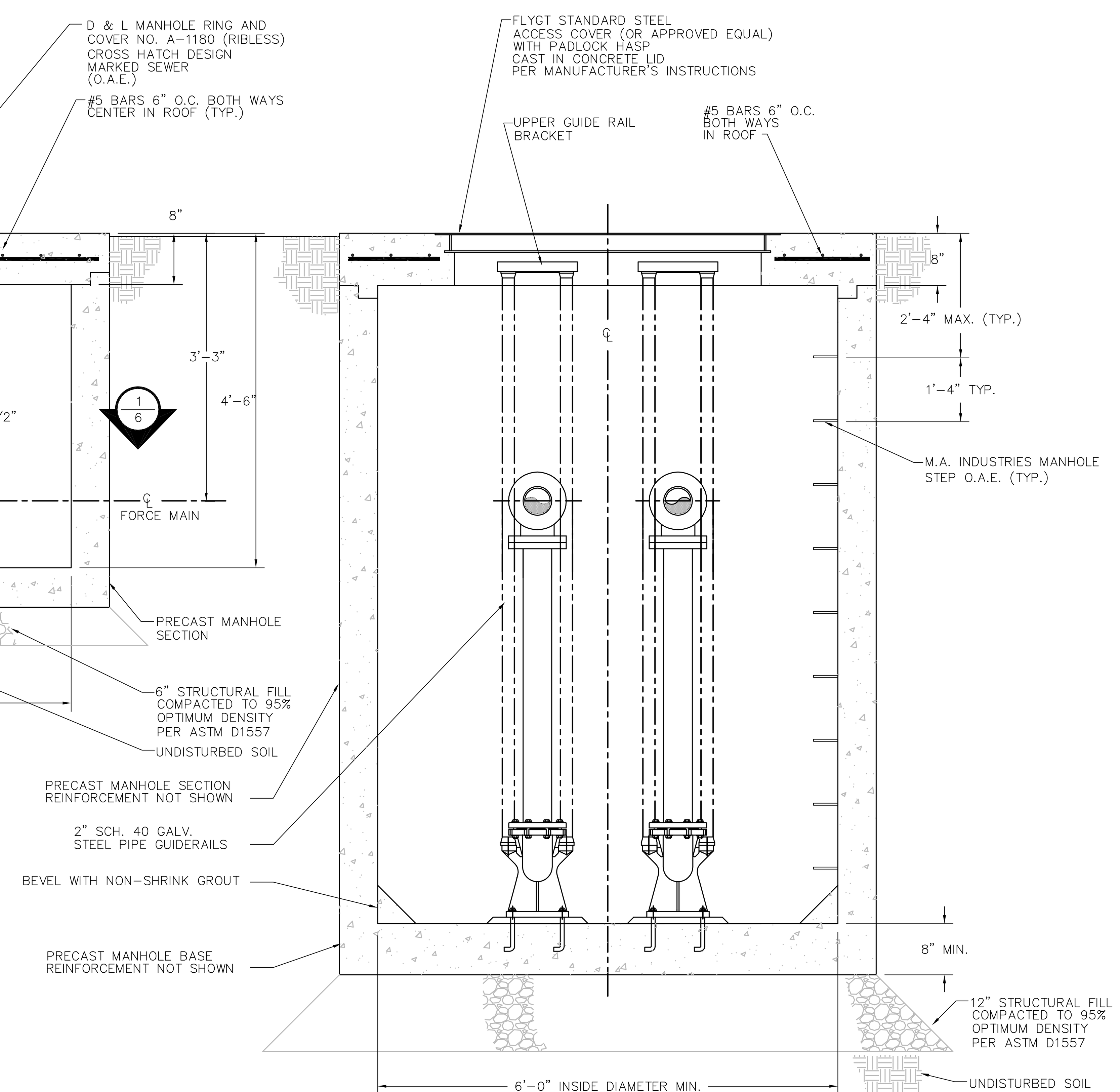

5/6 SECTION

SCALE: 3/4" = 1'-0"

PUMPS

EQUIPMENT

THE CONTRACTOR SHALL FURNISH AND INSTALL TWO (2) 6-INCH, FLYGT 18 HORSEPOWER, SUBMERSIBLE NON-CLOG PUMPS, WITH 453 HT IMPELLER. THE MOTOR SHALL BE 460 VOLT, 3 PHASE, 60 HZ.

THE PUMPS SHALL BE SUBMERSIBLE, NON-CLOG UNITS DESIGNED FOR HANDLING RAW SEWAGE. THE PUMPS SHALL BE CAPABLE OF OPERATING IN A LIQUID TEMPERATURE OF 104° F.

PROVIDE MOISTURE CUT-OFF SENSORS IN THE LIFT STATION PUMP MOTORS.

STAND BY GENERATOR SET
AS PART OF THE LIFT STATION SYSTEM THE CONTRACTOR SHALL FURNISH AND INSTALL A STAND-BY GENERATOR SET. THE GENERATOR SET SHALL BE A MTU ON-SITE ENERGY GENERATOR SET, MODEL-80 GC6NLT1 (OR AN APPROVED EQUAL). ALL PROVIDED EQUIPMENT, INSTALLATION, START-UP AND TESTING FOR THE GENERATOR SET SHALL COMPLY WITH THE EQUIPMENT MANUFACTURE'S LATEST SPECIFICATIONS AND INSTRUCTIONS FOR THE ENGINE, GENERATOR, TRANSFER SWITCH, ENCLOSURE AND THEIR RELATED COMPONENTS.

SUBMITTALS

THE FOLLOWING SUBMITTAL DATA SHALL BE PROVIDED BEFORE INSTALLATION BEGINS:

A. PUMP PERFORMANCE CURVES
B. PUMP OUTLINE DRAWING
C. STATION DRAWING FOR ACCESSORIES
D. ELECTRICAL MOTOR DATA
E. CONTROL DRAWING AND DATA
F. ACCESS FRAME AND DRAWING
G. INSTALLATION GUIDES
H. TECHNICAL MANUALS
I. PARTS LIST
J. AUTO DIALER
K. STAND BY GENERATOR SET AND ALL COMPONENTS.

FAILURE TO PROVIDE THIS INFORMATION SHALL BE CAUSE FOR REJECTION.

TESTS

THE FOLLOWING TEST SHALL BE PERFORMED ON EACH PUMP BEFORE SHIPMENT:

A. IMPELLER, MOTOR RATING AND ELECTRICAL CONNECTIONS SHALL BE CHECKED FOR COMPLIANCE WITH THE DRAWINGS.
B. PRIOR TO SUBMERGENCE, EACH PUMP SHALL BE RUN DRY TO ESTABLISH CORRECT ROTATION.
C. EACH PUMP SHALL BE RUN SUBMERGED IN WATER.
D. MOTOR AND CABLE INSULATION SHALL BE TESTED FOR MOISTURE CONTENT OR DEFECTS.

UPON REQUEST, A WRITTEN QUALITY ASSURANCE RECORD CONFIRMING THE ABOVE TESTING SHALL BE SUPPLIED WITH EACH PUMP AT THE TIME OF SHIPMENT.

START-UP SERVICE

THE EQUIPMENT MANUFACTURER SHALL FURNISH THE SERVICES OF A QUALIFIED SEVICE REPRESENTATIVE AT THE SITE TO INSPECT THE INSTALLATION. AFTER THE PUMPS HAVE BEEN COMPLETELY INSTALLED AND WIRED, THE CONTRACTOR SHALL HAVE THE MANUFACTURER PERFORM THE FOLLOWING:

A. MEGGER STATOR AND POWER CABLES.
B. CHECK SEAL LUBRICATION
C. CHECK FOR PROPER ROTATION
D. CHECK POWER SUPPLY VOLTAGE
E. MEASURE MOTOR OPERATING LOAD AND NO LOAD CURRENT
F. CHECK LEVEL CONTROL OPERATION AND SEQUENCE
G. CHECK OPERATION OF STAND BY GENERATOR SET AND ALL COMPONENTS TO INSURE PROPER OPERATION FROM BEGINNING TO END OF A SIMULATED POWER OUTAGE.

DURING THIS INSPECTION THE MANUFACTURER'S REPRESENTATIVE SHALL REVIEW RECOMMENDED OPERATION AND MAINTENANCE PROCEDURES WITH THE OWNER'S PERSONNEL.

SCALE: 1"=50'	DATE: 8/2016
DRAWN: T.B.M.	CHECKED: K.C.W.

CEDAR CITY
P.O. BOX 249
10 NORTH MAIN STREET
CEDAR CITY, UTAH 84721
PH. (435) 586-2963

C:\Acad_Projects\DETAILS 2002\cedar city logo.jpg

SUBMERSIBLE SEWER LIFT STATION

LOCATED IN SECTION , T 36 S, R 11 W, SLM CEDAR CITY, UTAH

SHEET NO. S6
OF SHEETS

FILE: S06.DWG