CONSTRUCTION NOTES:

1. 24" SQUARE CONCRETE COLLAR 8" THICK.
2. TOP OF VALVE BOX AND CONCRETE COLLAR TO BE 1/4" BELOW FINAL STREET GRADE. REINFORCEMENT #4 BAR 16" Ø w/ FIBERS (TYP.)
3. IF TOP OF VALVE NUT IS MORE THAN 4' DEEP THEN VALVE STEM EXTENSION IS REQUIRED PER DETAIL.
4. CLEAN OUT PIPE SIZE & MATERIAL SHALL BE THE SAME AS THE PRESSURE SEWER MAIN.
5. PIPE METAL CAP w/ LETTERS "SEWER"
6. 45° BEND REQ'D w/ RESTRAINT JOINTS (MEGALUG O.A.E.)
7. GATE VALVE (TYP.) w/ RESTRAINT JOINTS (MEGALUG O.A.E.)
8. TRENCH BACKFILL
9. CAST IRON SCREW TYPE VALVE BOX
10. PAVEMENT STRUCTURE AS SPECIFIED BY THE DESIGN AGENCY
11. TRACE-O-FLEX MARKER w/ TERMINAL POINTS BY CARSONITE - (ORANGE COLOR)
12. 12 GA. INSULATED COPPER LOCATE WIRE DUCT TAPED TO TOP OF PIPE AT 10' INTERVALS
13. PRESSURE SEWER MAIN.
14. SCH. 40 PVC PIPE (SIZE VARIES)
15. GATE VALVE w/ 2" VALVE WRENCH NUT
16. PVC CAP
17. TAPPING SADDLE PER SPECS.
18. INLINE ISOLATION VALVE (SEE NOTES)
19. CHECK VALVE BY CUSTOMER AT TIME OF CONNECTION.

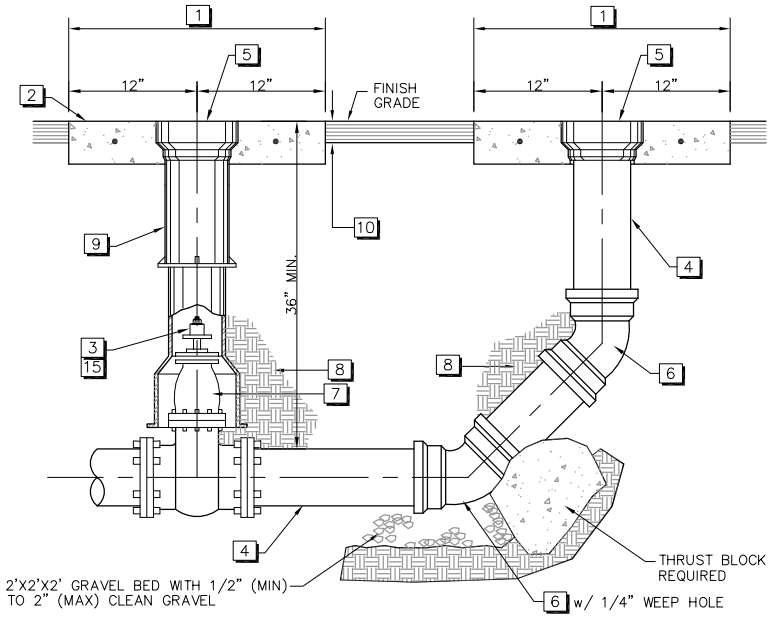

PRESSURE SEWER CLEAN-OUT DETAIL

N.T.S.

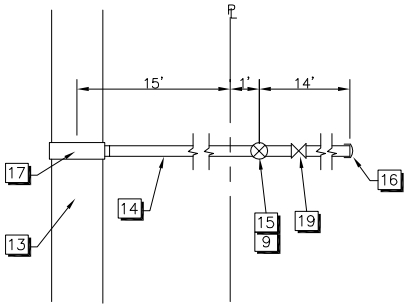

PRESSURE SEWER LATERAL

N.T.S.

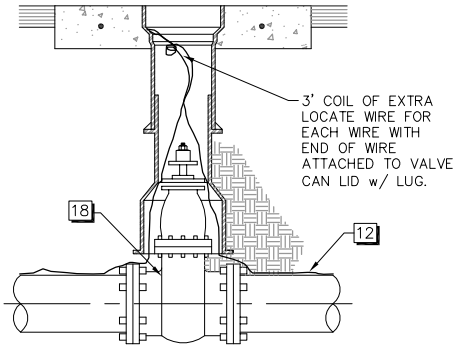

PAVED AREA LOCATE WIRE TERMINATION

N.T.S.

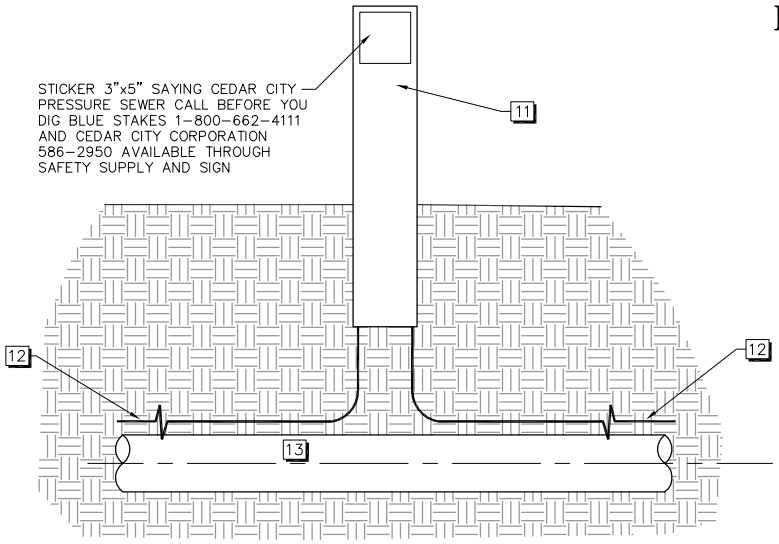

UNPAVED AREA LOCATOR POST DETAIL

N.T.S.

NOTES:

1. LOCATOR POSTS TO BE PLACED AT 1000' MAX. SPACING NEXT TO IN-LINE VALVES AND BENDS ON PRESSURE SEWER MAIN.
2. PRESSURE SEWER CLEAN-OUT TO BE PLACED AT 2000' MAX. SPACING NEXT TO END OF PIPES OR IN-LINE VALVES.
3. IN-LINE VALVES TO BE PLACED EVERY 2000' MAX. ON PRESSURE SEWER LINES.
4. IN PAVED AREAS LOCATE WIRE SHALL BE TERMINATED IN THE VALVE CANS OF THE IN-LINE VALVES PER DETAIL.

SHEET NO.				SCALE:	DATE:
S8	PRESSURE SEWER CLEAN-OUT, LATERAL AND LOCATOR POST		CEDAR CITY 10 NORTH MAIN STREET CEDAR CITY, UTAH 84720 PH. (435) 586-2963	N.T.S.	8/2016
FILE: S08				DRAWN: T.B.M.	CHECKED: K.C.W.